Medium Pressure Filter RLT

Model No. of filter in photograph is RLT9VZ10P20D5.

Features and Benefits

- Durable, compact design
- Quick and easy cartridge element changeouts
- Available in 9" and 14" element lengths
- Lightweight at 8 pounds
- Offered in pipe, SAE straight thread, flange and ISO 228 porting
- Available with NPTF inlet and outlet female test ports
- Various Dirt Alarm® options
- Same day shipment model available

70 gpm
265 L/min
1400 psi
97 bar

Filter Housing Specifications

Flow Rating:	Up to 70 gpm (265 L/min) for 150 SUS (32 cSt) fluids for P20, S20, & B20 porting Up to 50 gpm (190 L/min) for 150 SUS (32 cSt) fluids for P16, S16, F16, F20 & B16 porting
Max. Operating Pressure:	1400 psi (97 bar)
Min. Yield Pressure:	4200 psi (290 bar) , per NFPA T2.6.1
Rated Fatigue Pressure:	415 psi (29 bar), per NFPA T2.6.1-R1-2005
Temp. Range:	-20°F to 225°F (-29°C to 107°C)
Bypass Setting:	Cracking: 40 psi (2.8 bar) for all porting Full Flow: 57 psi (3.9 bar) for P20 & S20 porting Full Flow: 75 psi (5.2 bar) for P16, S16, F16 & F20 porting
Porting Head:	Aluminum
Element Case:	Aluminum
Weight of RLT-9V:	6.7 lbs. (3.0 kg)
Weight of RLT-14V:	8.0 lbs. (3.6 kg)
Element Change Clearance:	9V & 14V: 2.75" (70 mm)

Fluid Compatibility

Type Fluid	Appropriate Schroeder Media
Petroleum Based Fluids	All E media (cellulose) and Z-Media® (synthetic)
High Water Content	All Z-Media® (synthetic)
Invert Emulsions	10 and 25 µ Z-Media® (synthetic)
Water Glycols	3, 5, 10 and 25 µ Z-Media® (synthetic)
Phosphate Esters	All Z-Media® (synthetic) with H (EPR) seal designation
Skydrol®	3, 5, 10 and 25 µ Z-Media® (synthetic) with H.5 seal designation (EPR seals and stainless steel wire mesh in element, and light oil coating on housing exterior)

Medium Pressure Filter

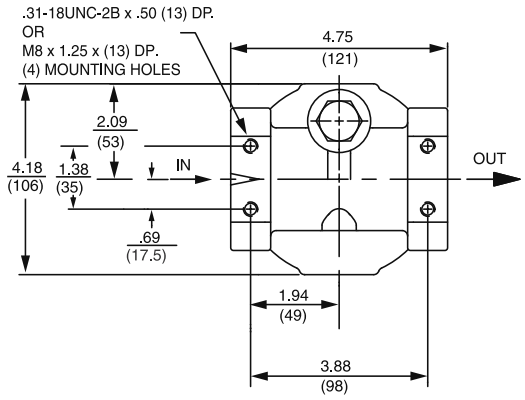

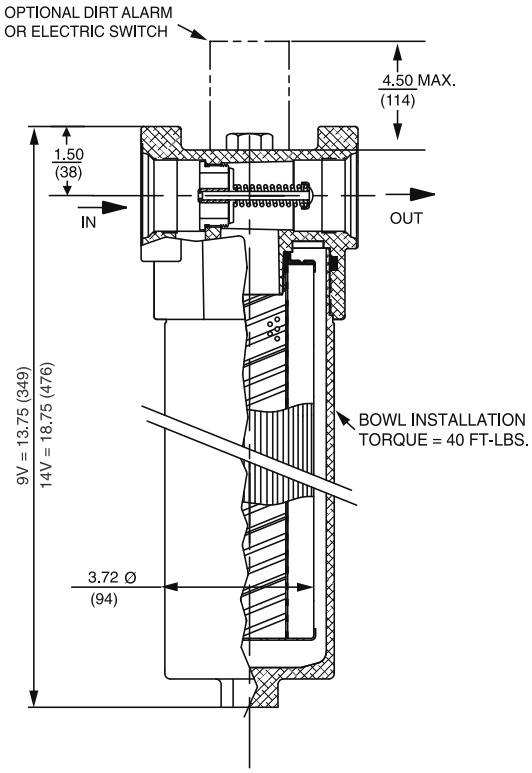

Metric dimensions in ( ).
Dimensions shown are inches (millimeters) for general information and overall envelope size only.
For complete dimensions please contact Schroeder Industries to request a certified print.

Element Performance Information & Dirt Holding Capacity

	Filtration Ratio Per ISO 4572/NFPA T3.10.8.8 Using automated particle counter (APC) calibrated per ISO 4402			Filtration Ratio per ISO 16889 Using APC calibrated per ISO 11171	
Element	**$\beta_x \geq 75$**	**$\beta_x \geq 100$**	**$\beta_x \geq 200$**	**$\beta_x(c) \geq 200$**	**$\beta_x(c) \geq 1000$**
9VZ1/14VZ1	<1.0	<1.0	<1.0	<4.0	4.2
9VZ3/14VZ3	<1.0	<1.0	<2.0	<4.0	4.8
9VZ5/14VZ5	2.5	3.0	4.0	4.8	6.3
9VZ10/14VZ10	7.4	8.2	10.0	8.0	10.0
9VZ25/14VZ25	18.0	20.0	22.5	19.0	24.0

Element	DHC (gm)	Element	DHC (gm)
9VZ1	55	14VZ1	102
9VZ3	57	14VZ3	105
9VZ5	62	14VZ5	115
9VZ10	52	14VZ10	104
9VZ25	48	14VZ25	94

Element Collapse Rating: 150 psid (10 bar)
500 psid (34.5 bar) for hydrostatic high collapse (9V5Z and 14V5Z) version

Flow Direction: Outside In

Element Nominal Dimensions: 9V: 3.0" (75 mm) O.D. x 9.5" (240 mm) long
14V: 3.0" (75 mm) O.D. x 14.5" (370 mm) long

Pressure Drop Information
Based on Flow Rate and Viscosity

$\Delta P_{housing}$

RLT $\Delta P_{housing}$ for fluids with sp gr (specific gravity) = 0.86:

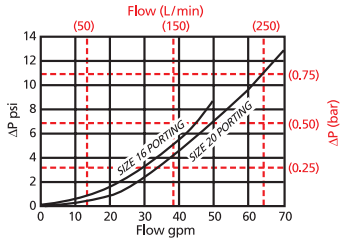

$\Delta P_{element}$

9VZ

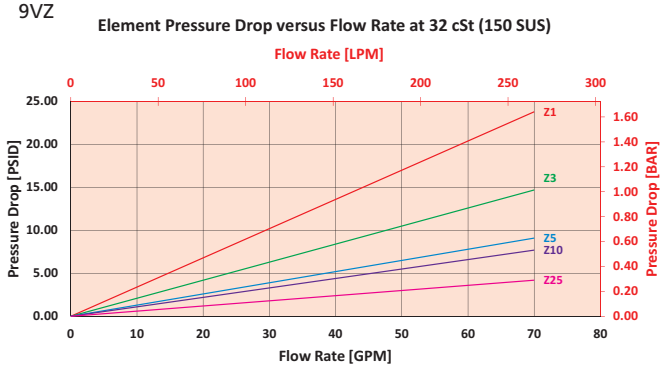

14VZ

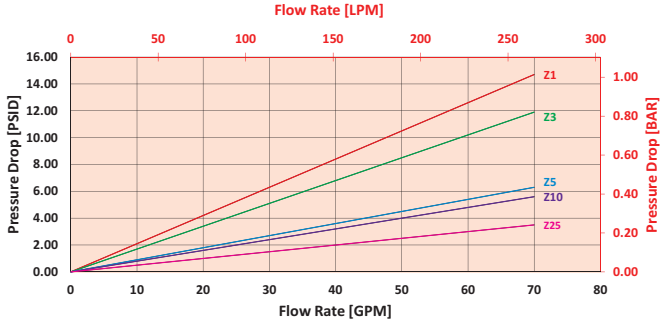

$$\Delta P_{filter} = \Delta P_{housing} + (\Delta P_{element} * V_f)$$

Exercise:

Determine ΔP_{filter} at 40 gpm (151.6 L/min) for RLT9VZ10S20D5 using 175 SUS (37.2 cSt) fluid.

Use the housing pressure curve to determine $\Delta P_{housing}$ at 40 gpm. In this case, $\Delta P_{housing}$ is 4.5 psi (.31 bar) on the graph for the RLT housing.

Use the element pressure curve to determine $\Delta P_{element}$ at 40 gpm. In this case, $\Delta P_{element}$ is 6 psi (.415 bar) according to the graph for the 9VZ10 element.

Because the viscosity in this sample is 175 SUS (37.2 cSt), we determine the **Viscosity Factor (V_f)** by dividing the **Operating Fluid Viscosity** with the **Standard Viscosity** of 150 SUS (32 cSt). To best determine your Operating Fluid Viscosity, please reference the chart in Appendix D.

Finally, the overall filter pressure differential, ΔP_{filter} , is calculated by adding $\Delta P_{housing}$ with the true element pressure differential, ($\Delta P_{element}$*V_f). The $\Delta P_{element}$ from the graph has to be multiplied by the viscosity factor to get the true pressure differential across the element.

Solution:

$\Delta P_{housing}$ = 4.5 psi [.31 bar] | $\Delta P_{element}$ = 4 psi [.27 bar]

V_f = 175 SUS (37.2 cSt) / 150 SUS (32 cSt) = 1.2

ΔP_{filter} = 4.5 psi + (4 psi * 1.2) = 9.3 psi

OR

ΔP_{filter} = .31 bar + (.27 bar * 1.2) = .63 bar

Note:
If your element is not graphed, use the following equation:
$\Delta P_{element}$ = Flow Rate x ΔP_f. Plug this variable into the overall pressure drop equation.

Ele.	ΔP	Ele.	ΔP
9V3	0.32	14V3	0.19
9V10	0.24	14V10	0.15

RLT Medium Pressure Filter

Filter Model Number Selection

Highlighted product eligible for QuickDelivery

How to Build a Valid Model Number for a Schroeder RLT:

BOX 1	BOX 2	BOX 3	BOX 4	BOX 5	BOX 6	BOX 7	BOX 8
RLT							

Example: *NOTE: One option per box*

BOX 1	BOX 2	BOX 3	BOX 4	BOX 5	BOX 6	BOX 7	BOX 8	
RLT	9	VZ10		S20		D5		= RLT9VZ10S20D5

BOX 1

Filter Series
RLT
RLTN (Non-bypassing: requires V5Z high collapse elements)
WRLT (Water)

BOX 2

Element Length (in)
9
14

BOX 3

Element Size and Media
VZ1 = V size 1 µ Excellement® Z-Media® (synthetic)
VZ3 = V size 3 µ Excellement® Z-Media® (synthetic)
VZ5 = V size 5 µ Excellement® Z-Media® (synthetic)
VZ10 = V size 10 µ Excellement® Z-Media® (synthetic)
VZ25 = V size 25 µ Excellement® Z-Media® (synthetic)
VW = V size W media (water removal)
V5Z3 = V size 3 µ Excellement® media, 500 psid collapse
V5Z5 = V size 5 µ Excellement® media, 500 psid collapse
V5Z10 = V size 10 µ Excellement® media, 500 psid collapse
V5Z25 = V size 25 µ Excellement® media, 500 psid collapse
Water Service Element Options
VM60 = V size 60 µ M media (reusable metal)
VM150 = V size 150 µ M media (reusable metal)
VM260 = V size 260 µ M media (reusable metal)

BOX 4

Seal Material
Omit = Buna N
H = EPR
V = Viton®
H.5 = Skydrol® Compatibility

BOX 5

Porting Options
P16 = 1" NPTF
P20 = 1¼" NPTF
S16 = SAE-16
S20 = SAE-20
F20 = 1¼" SAE 4-bolt flange Code 61
B16 = ISO 228 G-1"
B20 = ISO 228 G-1¼"

BOX 6

Bypass	
Omit	= 40 PSI Bypass
50	= 50 PSI Bypass
60	= 60 PSI Bypass
X	= Blocked Bypass

(Omit box 6 if a RLTN is selected)

BOX 7

	Dirt Alarm® Options
None	Omit = None
Visual	D5 = Visual pop-up
	D8 = Visual w/ thermal lockout
Electrical	MS5 = Electrical w/ 12 in. 18 gauge 4-conductor cable
	MS5LC = Low current MS5
	MS10 = Electrical w/ DIN connector (male end only)
	MS10LC = Low current MS10
	MS11 = Electrical w/ 12 ft. 4-conductor wire
	MS12 = Electrical w/ 5 pin Brad Harrison connector (male end only)
	MS12LC = Low current MS12
	MS16 = Electrical w/ weather-packed sealed connector
	MS16LC = Low current MS16
	MS17LC = Electrical w/ 4 pin Brad Harrison male connector
Electrical with Thermal Lockout	MS5T = MS5 (see above) w/ thermal lockout
	MS5LCT = Low current MS5T
	MS10T = MS10 (see above) w/ thermal lockout
	MS10LCT = Low current MS10T
	MS12T = MS12 (see above) w/ thermal lockout
	MS12LCT = Low current MS12T
	MS16T = MS16 (see above) w/ thermal lockout
	MS16LCT = Low current MS16T
	MS17LCT = Low current MS17T
Electrical Visual	MS13 = Supplied w/ threaded connector & light
	MS14 = Supplied w/ 5 pin Brad Harrison connector & light (male end)
Electrical Visual with Thermal Lockout	MS13DCT = MS13 (see above), direct current, w/ thermal lockout
	MS13DCLCT = Low current MS13DCT
	MS14DCT = MS14 (see above), direct current, w/ thermal lockout
	MS14DCLCT = Low current MS14DCT

BOX 8

Additional Options
Omit = None
L = Two ¼" NPTF inlet and outlet female test ports

NOTES:

Box 2. Replacement element part numbers are a combination of Boxes 2, 3, and 4. *Example*: 9VZ10V

Box 3. E media elements are only available with Buna N seals. V5Z10 and V5Z25 are only available with RLTN 9".

Box 4. For options H, V, and H.5, all aluminum parts are anodized. H.5 seal designation includes the following: EPR seals, stainless steel wire mesh on elements, and light oil coating on housing exterior. Viton® is a registered trademark of DuPont Dow Elastomers. Skydrol® is a registered trademark of Solutia Inc.

Box 5. B porting supplied with metric mounting holes.

Box 6. When X is paired with a standard filter series, a standard bushing and spring plate will be used.