HydraSPIN Filter Series GH

GH6

GH9

GH14

GH11

Model No. of filters in photograph are GH6, GH9, GH11, and GH14.

Features and Benefits

- Variety of differential indicator port options (visual and electrical indicators)
- Leak proof bar indicator, rugged visual indicator with protective aluminum shield is standard
- Proprietary bowl to element seal - minimizes potential leakage point by use of one seal on element
- Cartridge style element (non spin-on) that is proprietary and patented with integrated bypass valve features
- Wide variety of media grades that can be application specific
- Light weight bowl design with replaceable element minimizes landfill waste
- Mounting interchangeability with competitor's filter head
- The inherent capability to pre-print the perforated outer element wrap provides a branding solution that helps to capture after-market replacement element sales
- GH6 – Bolt up cartridge element replacement for the Donaldson DURAMAX HMK04 w/ 5.9" Spin-On Can
- GH9 – Bolt up cartridge element replacement for the Donaldson DURAMAX HMK04 w/ 9.4" Spin-On Can
- GH11 – Bolt up cartridge element replacement for the Donaldson DURAMAX HMK05 w/ 11.6" Spin-On Can
- GH14 – Bolt up cartridge element replacement for the Donaldson DURAMAX HMK05 w/ 14.3" Spin-On Can
- Same day shipment model available (GH6 & GH9)

Part of Schroeder Industries Energy Savings Initiative

35-112 gpm
130-425 L/min
500-725 psi
35-50 bar

Filter Housing Specifications

	GH6	GH9	GH11	GH14
Flow Rating: (150 SUS (32 cSt) fluids)	Up to 35 gpm (130 L/min)	Up to 35 gpm (130 L/min)	Up to 87 gpm (325 L/min)	Up to 112 gpm (425 L/min)
Max. Operating Pressure:	725 psi (50 bar)	725 psi (50 bar)	500 psi (35 bar)	500 psi (35 bar)
Min. Yield Pressure:	2600 psi (179 bar)	2600 psi (179 bar)	2700 psi (186 bar)	2700 psi (186 bar)
Rated Fatigue Pressure:	725 psi (50 bar)	725 psi (50 bar)	500 psi (35 bar)	500 psi (35 bar)
Temp. Range:	-20°F to 225°F (-29°C to 107°C)	-20°F to 225°F (-29°C to 107°C)	-22°F to 212°F (-30°C to 100°C)	-22°F to 212°F (-30°C to 100°C)
Bypass Setting:	25 psi (1.7 bar) standard 50 psi (3.5 bar) optional Non-Bypassing	25 psi (1.7 bar) standard 50 psi (3.5 bar) optional Non-Bypassing	43 psi (3 bar) standard 87 psi (6 bar) optional Non-Bypassing	43 psi (3 bar) standard 87 psi (6 bar) optional Non-Bypassing
Porting Head:	Cast Aluminum	Cast Aluminum	Cast Aluminum	Cast Aluminum
Element Case:	Aluminum	Aluminum	Aluminum	Aluminum
Weight:	3.2 lbs (1.4 kg)	3.8 lbs (1.7 kg)	8.0 lbs (3.6 kg)	10.0 lbs (4.5 kg)
Element Change Clearance:	2" (50 mm)	2" (50 mm)	7.4" (187 mm)	7.4" (187 mm)

Fluid Compatibility

Type Fluid	Appropriate Schroeder Media
Petroleum Based Fluids	All media (synthetic) and H media (Hydraspin)

HydraSPIN Filter Series

Dimensions (GH6 & GH9)

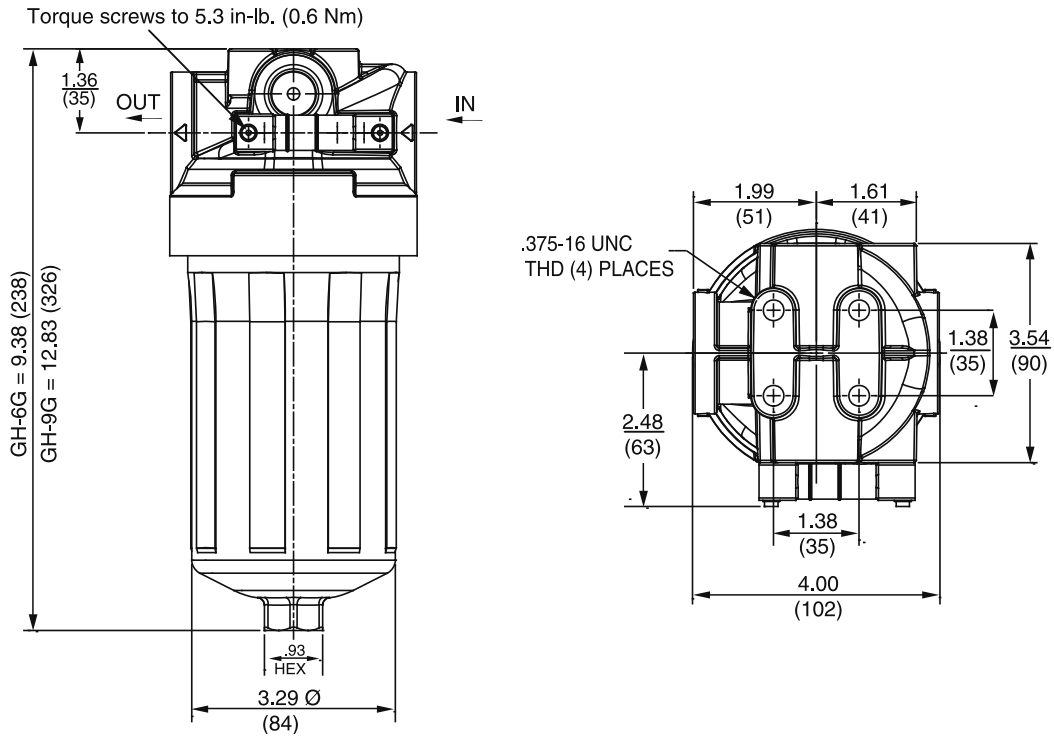

Metric dimensions in ( ).

Element Performance Information & Dirt Holding Capacity

Media Type	Element	Filtration Ratio Per ISO 4572/NFPA T3.10.8.8 Using automated particle counter (APC) calibrated per ISO 4402			Filtration Ratio per ISO 16889 Using APC calibrated per ISO 11171	
		$\beta_x \geq 75$	$\beta_x \geq 100$	$\beta_x \geq 200$	$\beta_x(c) \geq 200$	$\beta_x(c) \geq 1000$
Resin Impregnated Cellulose Media	6G3/9G3	6.8	7.5	10.0	N/A	N/A
	6G10/9G10	15.5	16.2	18.0	N/A	N/A
Traditional Excellement® Z-Media®	6GZ3 / 9GZ3	<1.0	<1.0	<2.0	<4.0	4.8
	6GZ5 / 9GZ5	2.5	3.0	4.0	4.8	6.3
	6GZ10 / 9GZ10	7.4	8.2	10.0	8.0	10.0
	6GZ25 / 9GZ25	18.0	20.0	22.5	19.0	24.0
Hydraspin H Media, designed to specifically reduce filter pressure drop	6GH10/ 9GH10	N/A	N/A	N/A	10.6	13.0

Media Type	Element	DHC (gm)
Resin Impregnated Cellulose Media	6G3/9G3	18/30
	6G10/9G10	15/25
Traditional Excellement® Z-Media®	6GZ3 / 9GZ3	30/51
	6GZ5 / 9GZ5	24.5/42
	6GZ10 / 9GZ10	31/49
	6GZ25 / 9GZ25	34/58
Hydraspin H Media, designed to specifically reduce filter pressure drop	6GH10/9GH10	12/20

Element Collapse Rating: 250 psid (17.2 bar) for standard and non-bypassing elements

Flow Direction: Outside In

Element Nominal Dimensions: 6G: 3.25" (82 mm) O.D. x 5.7" (144 mm) long
9G: 3.25" (82 mm) O.D. x 9.0" (229 mm) long

Dimensions (GH11 & GH14)

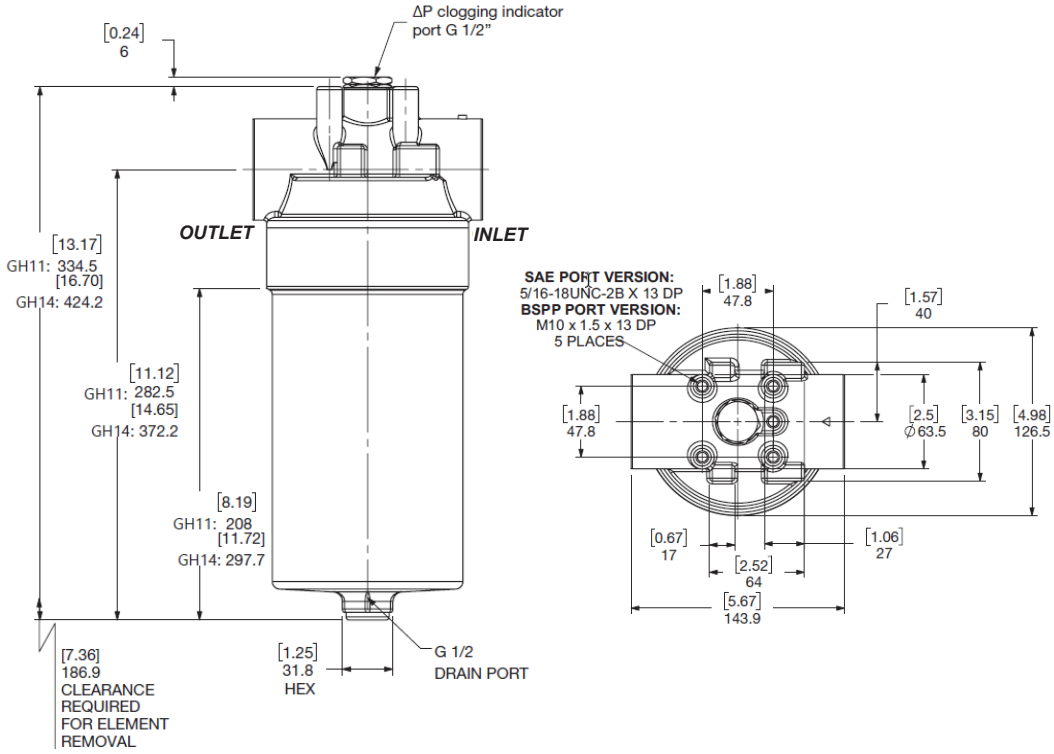

Metric dimensions in ( ).

Element Performance Information & Dirt Holding Capacity

Media Type	Element	Filtration Ratio Per ISO 4572/NFPA T3.10.8.8 Using automated particle counter (APC) calibrated per ISO 4402			Filtration Ratio per ISO 16889 Using APC calibrated per ISO 11171	
		$\beta_x \geq 75$	$\beta_x \geq 100$	$\beta_x \geq 200$	$\beta_x(c) \geq 200$	$\beta_x(c) \geq 1000$
Traditional Excellement® Z-Media®	11GZ3/14GZ3	<1.0	<1.0	<2.0	<4.0	4.8
	11GZ5/14GZ5	2.5	3.0	4.0	4.8	6.3
	11GZ10/14GZ10	7.4	8.2	10.0	8.0	10.0
	11GZ25 /14GZ25	18.0	20.0	22.5	19.0	24.0

Media Type	Element	DHC (gm)
Traditional Excellement® Z-Media®	11GZ3/14GZ3	53/75
	11GZ5/14GZ5	75/105
	11GZ10/14GZ10	60/84
	11GZ25/14GZ25	61/85

Element Collapse Rating: 290 psid (17.2 bar) for standard and non-bypassing elements

Flow Direction: Outside In

Element Nominal Dimensions: 11G: 3.7" (94 mm) O.D. x 7.6" (193 mm) long
14G: 3.7" (94 mm) O.D. x 11.1" (282 mm) long

Pressure Drop Information (GH6 & GH9)

Based on Flow Rate and Viscosity

$\Delta P_{housing}$

GH $\Delta P_{housing}$ for fluids with sp gr (specific gravity) = 0.86:

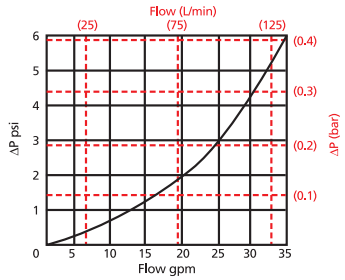

$\Delta P_{element}$

6GZ

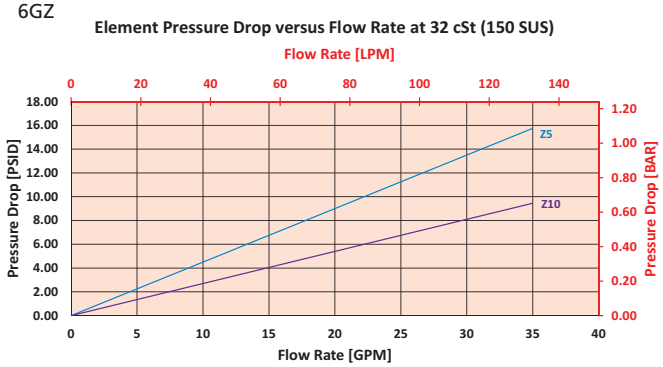

9GZ

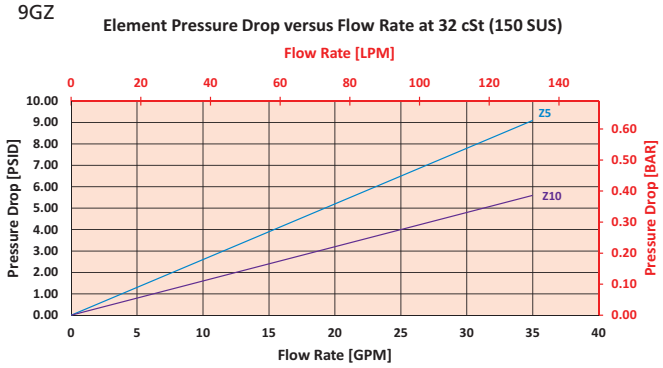

$$\Delta P_{filter} = \Delta P_{housing} + (\Delta P_{element} * \nu_f)$$

Exercise:

Determine ΔP_{filter} at 15 gpm (57 L/min) for GH6GZ10S12L using 160 SUS (34 cSt) fluid.

Use the housing pressure curve to determine $\Delta P_{housing}$ at 15 gpm. In this case, $\Delta P_{housing}$ is 1.5 psi (0.10 bar) on the graph for the GH housing.

Use the element pressure curve to determine $\Delta P_{element}$ at 15 gpm. In this case, $\Delta P_{element}$ is 4 psi (0.27 bar) according to the graph for the 6GZ10 element.

Because the viscosity in this sample is 160 SUS (34 cSt), we determine the **Viscosity Factor (ν_f)** by dividing the **Operating Fluid Viscosity** with the **Standard Viscosity** of 150 SUS (32 cSt). To best determine your Operating Fluid Viscosity, please reference the chart in Appendix D.

Finally, the overall filter pressure differential, ΔP_{filter} , is calculated by adding $\Delta P_{housing}$ with the true element pressure differential, ($\Delta P_{element} * \nu_f$). The $\Delta P_{element}$ from the graph has to be multiplied by the viscosity factor to get the true pressure differential across the element.

Solution:

$\Delta P_{housing}$ = 1.5 psi [0.10 bar] | $\Delta P_{element}$ = 4 psi [0.27 bar]

ν_f = 160 SUS (34 cSt) / 150 SUS (32 cSt) = 1.1

ΔP_{filter} = 1.5 psi + (4 psi * 1.1) = 5.9 psi

OR

ΔP_{filter} = 0.10 bar + (0.27 bar * 1.1) = 0.40 bar

Note:
If your element is not graphed, you can obtain your $\Delta P_{element}$ by multiplying the flow rate by the following: $\Delta P_{element}$ **Factors** x ν (Visc. Factor)

$\Delta P_{element}$ Factors @ 150 SUS (32 cSt)

Ele.	ΔP	Ele.	ΔP
6G3	0.60	9G3	0.35
6G10	0.40	9G10	0.24
6G25	0.08	9G25	0.05
6GH10	C/F	9GH10	C/F
6GZ3	0.60	9GZ3	0.35
6GZ25	C/F	9GZ25	C/F

Pressure Drop Information (GH11 & GH14)

Based on Flow Rate and Viscosity

$\Delta P_{housing}$

GH $\Delta P_{housing}$ for fluids with sp gr (specific gravity) = 0.86:

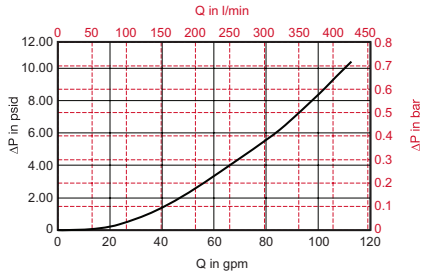

$\Delta P_{element}$

11GZ

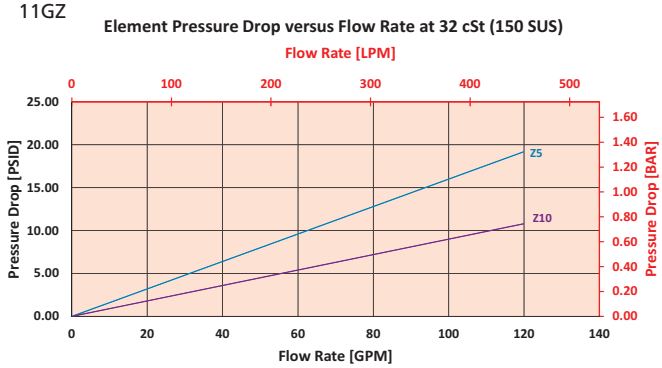

14GZ

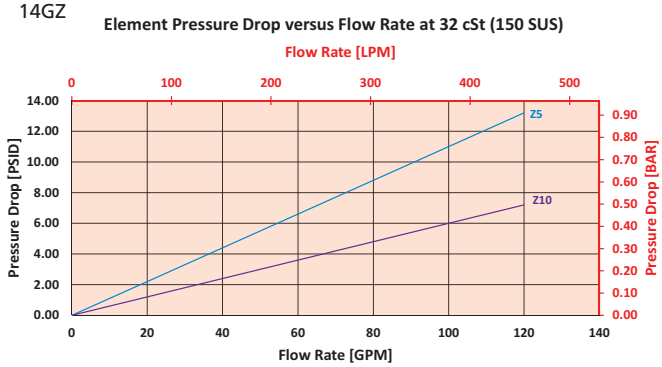

$$\Delta P_{filter} = \Delta P_{housing} + (\Delta P_{element} * \nu_f)$$

Exercise:

Determine ΔP_{filter} at 60 gpm (227.4 L/min) for GH11GZ10S24VA using 160 SUS (34 cSt) fluid.

Use the housing pressure curve to determine $\Delta P_{housing}$ at 60 gpm. In this case, $\Delta P_{housing}$ is 3 psi (0.21 bar) on the graph for the GH housing.

Use the element pressure curve to determine $\Delta P_{element}$ at 60 gpm. In this case, $\Delta P_{element}$ is 5 psi (0.34 bar) according to the graph for the 11GZ10 element.

Because the viscosity in this sample is 160 SUS (34 cSt), we determine the **Viscosity Factor (ν_f)** by dividing the **Operating Fluid Viscosity** with the **Standard Viscosity** of 150 SUS (32 cSt). To best determine your Operating Fluid Viscosity, please reference the chart in Appendix D.

Finally, the overall filter pressure differential, ΔP_{filter} , is calculated by adding $\Delta P_{housing}$ with the true element pressure differential, ($\Delta P_{element} * \nu_f$). The $\Delta P_{element}$ from the graph has to be multiplied by the viscosity factor to get the true pressure differential across the element.

Solution:

$\Delta P_{housing}$ = 3 psi [0.21 bar] | $\Delta P_{element}$ = 5 psi [0.34 bar]

ν_f = 160 SUS (34 cSt) / 150 SUS (32 cSt) = 1.1

ΔP_{filter} = 3 psi + (5 psi * 1.1) = 8.5 psi

OR

ΔP_{filter} = 0.21 bar + (0.34 bar * 1.1) = 0.58 bar

Note:
If your element is not graphed, you can obtain your $\Delta P_{element}$ by multiplying the flow rate by the following: $\Delta P_{element}$ **Factors** x νP (Visc. Factor)

$\Delta P_{element}$ Factors @ 150 SUS (32 cSt)

Ele.	ΔP
11GZ3	0.21
11GZ25	0.06
14GZ3	0.14
14GZ25	0.04

HydraSPIN Filter Series

Filter Model Number Selection (GH6 & GH9

Highlighted product eligible for QuickDelivery

How to Build a Valid Model Number for a Schroeder GH6/GH9:

BOX 1	BOX 2	BOX 3	BOX 4	BOX 5	BOX 6	BOX 7
GH						

Example: *NOTE: One option per box*

BOX 1	BOX 2	BOX 3	BOX 4	BOX 5	BOX 6	BOX 7	
GH	6	GZ10			S16	L	= GH6GZ10S16L

BOX 1 — Filter Series

Filter Series
GH

BOX 2 — Element Length (in)

Element Length (in)
6
9

BOX 3 — Element Part Number

G3	= 3 µ E media (cellulose)
G10	= 10 µ E media (cellulose)
G25	= 25 µ E media (cellulose)
GZ3	= 3 µ Excellement® Z-Media® (synthetic)
GZ5	= 5 µ Excellement® Z-Media® (synthetic)
GZ10	= 10 µ Excellement® Z-Media® (synthetic)
GZ25	= 25 µ Excellement® Z-Media® (synthetic)
GH10	= 10 µ Excellement® Hydraspin media

BOX 4 — Bypass Setting

Omit	= 25 psid
50	= 50 psid
N	= Non-bypassing

BOX 5 — Element Seal Material

Element Seal Material
Omit = Buna N

BOX 6 — Inlet Port

Inlet Port
S12 = SAE-12
S16 = SAE-16
B12 = ISO 228 G-¾"
B16 = ISO 228 G-1"

BOX 7 — Dirt Alarm® Options

	Omit = None	
Visual	L = Bar indicator, left side std	
	R = Bar indicator, right side std	
	B = Bar indicators, left and right side	
	VA = Visual pop-up w/auto reset	
	VM = Visual pop-up w/manual reset	
Electrical	Omit = None	
	M = Drilled, tapped, plugged	
	DTC = DC 2 wire, normally closed (NC)	
	DTO = DC 2 wire, normally open (NO)	
	DW = AC/DC 3-wire (NO or NC)	

Indicator Location Option L

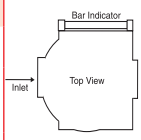

Filter Model Number Selection (GH11 & GH14)

How to Build a Valid Model Number for a Schroeder GH11/GH14:

BOX 1	BOX 2	BOX 3	BOX 4	BOX 5	BOX 6	BOX 7
GH						

Example: *NOTE: One option per box*

BOX 1	BOX 2	BOX 3	BOX 4	BOX 5	BOX 6	BOX 7	
GH	11	GZ10	87		S24	VA	= GH11GZ1087S24VA

BOX 1 — Filter Series

Filter Series
GH

BOX 2 — Element Length (in)

Element Length (in)
11
14

BOX 3 — Element Part Number

GZ3	= 3 µ Excellement® Z-Media® (synthetic)
GZ5	= 5 µ Excellement® Z-Media® (synthetic)
GZ10	= 10 µ Excellement® Z-Media® (synthetic)
GZ25	= 25 µ Excellement® Z-Media® (synthetic)

BOX 4 — Bypass Setting

Omit	= 47 psid
87	= 87 psid
N	= Non-bypassing

BOX 5 — Element Seal Material

Element Seal Material
Omit = Buna N
V = Viton

BOX 6 — Inlet Port

Inlet Port
B24 = ISO 228 G-1½"
S24 = SAE 24 Straight Thread Ports

BOX 7 — Dirt Alarm® Options

	Omit = None
Visual	VA = Visual pop-up w/auto reset
	VM = Visual pop-up w/manual reset
	VF = Visual analog
Electrical	EC = Electrical switch - SPDT
	ED = Electrical switch and LED light - SPDT

NOTES:

Box 2. Replacement element part numbers are a combination of Boxes 2, 3 and 4. Replacement elements contain bypass. For 50 psid setting or non-bypassing version, element part number includes suffix. Examples: 11GZ1050, 14GZ10N.

Box 7. VA and VM indicators are available with 50 psid bypass element only.