Return Line Filter with 2" Ports

LF1

Features and Benefits

- Offered in pipe, SAE straight thread and ISO 228 porting
- Available in 18" element lengths only
- Various Dirt Alarm® options
- Available with NPTF inlet and outlet female test ports
- Available with 2" porting with "K" size element
- Available with housing drain plug

120 *gpm*
455 L/min
300 psi
20 bar

Model No. of filter in photograph is LF118LCZ10P32D.

Filter Housing Specifications

Flow Rating:	Up to 120 gpm (455 L/min) for 150 SUS (32 cSt) fluids
Max. Operating Pressure:	300 psi (20 bar)
Min. Yield Pressure:	1000 psi (70 bar), per NFPA T2.6.1
Rated Fatigue Pressure:	250 psi (17 bar), per NFPA T2.6.1-2005
Temp. Range:	-20°F to 225°F (-29°C to 107°C)
Bypass Setting:	Cracking: 30 psi (2.1 bar) Full Flow: 60 psi (4.1 bar)
Porting Head: Element Case:	Cast Aluminum Steel
Available Porting:	2" NPTF, 2½-12 SAE Straight
Weight of LF1-18LC:	17.5 lbs. (7.9 kg)
Element Change Clearance:	2.0" (55 mm)

Fluid Compatibility

Type Fluid	Appropriate Schroeder Media
Petroleum Based Fluids	All E media (cellulose) and Z-Media® (synthetic)
High Water Content	All Z-Media (synthetic)
Invert Emulsions	10 and 25 µ Z-Media® (synthetic)
Water Glycols	3, 5, 10 and 25 µ Z-Media® (synthetic)
Phosphate Esters	All Z-Media® (synthetic) with H (EPR) seal designation
Skydrol®	3, 5, 10 and 25 µ Z-Media® (synthetic) with H.5 seal designation (EPR seals and stainless steel wire mesh in element, and light oil coating on housing exterior)

LF1 Return Line Filter with 2" Ports

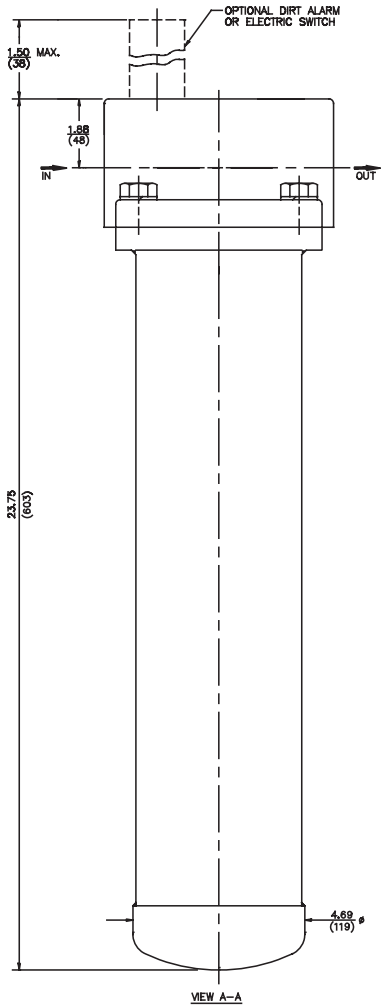

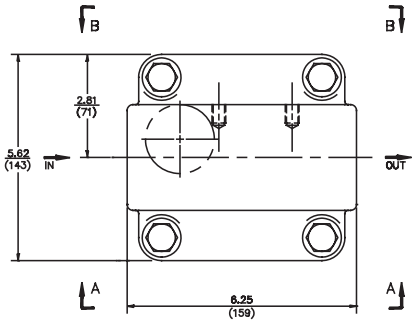

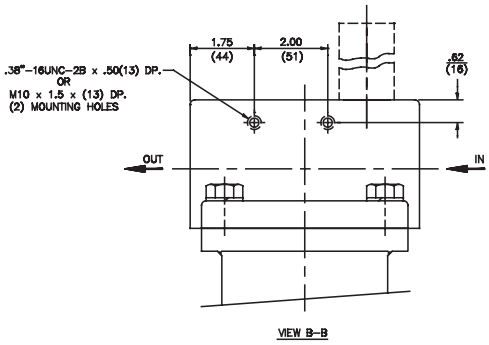

Metric dimensions in ( ).

Element Performance Information & Dirt Holding Capacity

Element	Filtration Ratio Per ISO 4572/NFPA T3.10.8.8 Using automated particle counter (APC) calibrated per ISO 4402			Filtration Ratio per ISO 16889 Using APC calibrated per ISO 11171	
	$\beta_x \geq 75$	$\beta_x \geq 100$	$\beta_x \geq 200$	$\beta_x(c) \geq 200$	$\beta_x(c) \geq 1000$
18LCZ1	<1.0	<1.0	<1.0	<4.0	4.2
18LCZ3	<1.0	<1.0	<2.0	<4.0	4.8
18LCZ5	2.5	3.0	4.0	4.8	6.3
18LCZ10	7.4	8.2	10.0	8.0	10.0
18LCZ25	18.0	20.0	22.5	19.0	24.0

Element	DHC (gm)
18LCZ1	224
18LCZ3	230
18LCZ5	238
18LCZ10	216
18LCZ25	186

Element Collapse Rating: 150 psid (10 bar)

Flow Direction: Outside In

Element Nominal Dimensions: 4.0" (100 mm) O.D. x 18.5" (470 mm) long

$\Delta P_{housing}$

LF1-2" $\Delta P_{housing}$ for fluids with sp gr (specific gravity) = 0.86:

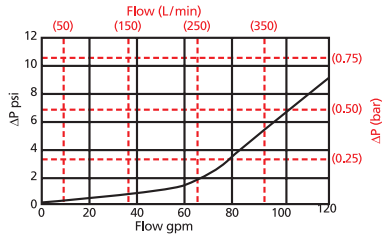

$\Delta P_{element}$

18LCZ

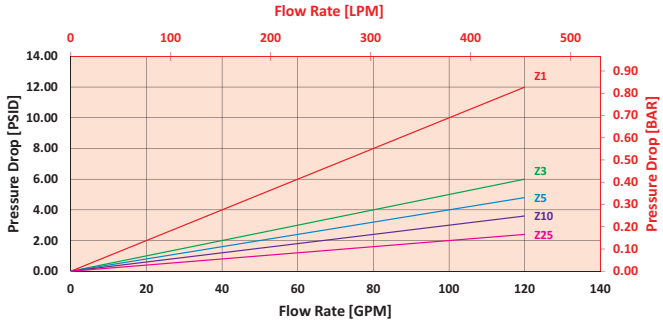

$$\Delta P_{filter} = \Delta P_{housing} + (\Delta P_{element} * V_f)$$

Exercise:

Determine ΔP_{filter} at 70 gpm (265.3 L/min) for LF118LCZ3P32D5 using 160 SUS (34 cSt) fluid.

Use the housing pressure curve to determine $\Delta P_{housing}$ at 70 gpm. In this case, $\Delta P_{housing}$ is 2 psi (.14 bar) on the graph for the LF1 housing.

Use the element pressure curve to determine $\Delta P_{element}$ at 70 gpm. In this case, $\Delta P_{element}$ is 3.5 psi (.24 bar) according to the graph for the 18LCZ3 element.

Because the viscosity in this sample is 160 SUS (34 cSt), we determine the **Viscosity Factor (V_f)** by dividing the **Operating Fluid Viscosity** with the **Standard Viscosity** of 150 SUS (32 cSt). To best determine your Operating Fluid Viscosity, please reference the chart in Appendix D.

Finally, the overall filter pressure differential, ΔP_{filter} , is calculated by adding $\Delta P_{housing}$ with the true element pressure differential, ($\Delta P_{element}$*V_f). The $\Delta P_{element}$ from the graph has to be multiplied by the viscosity factor to get the true pressure differential across the element.

Solution:

$\Delta P_{housing}$ = 2 psi [.14 bar] | $\Delta P_{element}$ = 3.5 psi [.24 bar]

V_f = 160 SUS (34 cSt) / 150 SUS (32 cSt) = 1.1

ΔP_{filter} = 2 psi + (3.5 psi * 1.1) = 5.9 psi

OR

ΔP_{filter} = .14 bar + (.24 bar * 1.1) = .40 bar

LF1 Return Line Filter with 2" Ports

Filter Model Number Selection

How to Build a Valid Model Number for a Schroeder LF1:

BOX 1	BOX 2	BOX 3	BOX 4	BOX 5	BOX 6	BOX 7
LF1						

Example: *NOTE: Only box 7 may contain more than one option*

BOX 1	BOX 2	BOX 3	BOX 4	BOX 5	BOX 6	BOX 7	
LF1	18	LC3		P32	D5		= LF118LC3P32D5

BOX 1

Filter Series
LF1
WLF1 (Water)

BOX 2

Length of Element (in)
18

BOX 3

Element Size and Media	
LC3	= LC size 3 µ E media (cellulose)
LC10	= LC size 10 µ E media (cellulose)
LCZ1	= LC size 1 µ Excellement® Z-Media™ (synthetic)
LCZ3	= LC size 3 µ Excellement Z-Media (synthetic)
LCZ5	= LC size 5 µ Excellement Z-Media (synthetic)
LCZ10	= LC size 10 µ Excellement Z-Media (synthetic)
LCZ25	= LC size 25 µ Excellement Z-Media (synthetic)

BOX 4

Seal Material	
Omit	= Buna N
H	= EPR
V	= Viton®
H.5	= Skydrol® Compatibility

BOX 5

Porting	
P32	= 2" NPTF
S32	= SAE-32
B32	= ISO 228 G-2"

BOX 6

Dirt Alarm® Options		
	Omit	= None
Visual	D	= Pointer
	D5	= Visual pop-up
Visual with Thermal Lockout	D8	= Visual w/ thermal lockout
Electrical	MS5	= Electrical w/ 12 in. 18 gauge 4-conductor cable
	MS5LC	= Low current MS5
	MS10	= Electrical w/ DIN connector (male end only)
	MS10LC	= Low current MS10
	MS11	= Electrical w/ 12 ft. 4-conductor wire
	MS12	= Electrical w/ 5 pin Brad Harrison connector (male end only)
	MS12LC	= Low current MS12
	MS16	= Electrical w/ weather-packed sealed connector
	MS16LC	= Low current MS16
	MS17LC	= Electrical w/ 4 pin Brad Harrison male connector
Electrical with Thermal Lockout	MS5T	= MS5 (see above) w/ thermal lockout
	MS5LCT	= Low current MS5T
	MS10T	= MS10 (see above) w/ thermal lockout
	MS10LCT	= Low current MS10T
	MS12T	= MS12 (see above) w/ thermal lockout
	MS12LCT	= Low current MS12T
	MS16T	= MS16 (see above) w/ thermal lockout
	MS16LCT	= Low current MS16T
	MS17LCT	= Low current MS17T
Electrical Visual	MS	= Cam operated switch w/ ½" conduit female connection
	MS13	= Supplied w/ threaded connector & light
	MS14	= Supplied w/ 5 pin Brad Harrison connector & light (male end)
Electrical Visual with Thermal Lockout	MS13DCT	= MS13 (see above), direct current, w/ thermal lockout
	MS13DCLCT	= Low current MS13DCT
	MS14DCT	= MS14 (see above), direct current, w/ thermal lockout
	MS14DCLCT	= Low current MS14DCT

BOX 7

Additional Options	
Omit	= None
L	= Two ¼" NPTF inlet and outlet female test ports
G426	= ¾" drain on bottom of housing
G440	= ½" drain on bottom of housing

NOTES:

Box 2. Replacement element part numbers are a combination of Boxes 2, 3, and 4. Example: 18LCZ3V

Box 4. For options H, V, and H.5, all aluminum parts are anodized. H.5 seal designation includes the following: EPR seals, stainless steel wire mesh on elements, and light oil coating on housing exterior.
Viton® is a registered trademark of DuPont Dow Elastomers.
Skydrol® is a registered trademark of Solutia Inc.

Box 5. B porting option supplied with metric mounting holes.