Top-Ported Pressure Filter VF60

70 gpm
265 L/min
6000 psi
415 bar

Model No. of filter in photograph is VF609VZ10SD5.

Features and Benefits

- Top-ported high pressure filter
- Threaded bowl for easy element servicing
- Offered in pipe, SAE straight thread and ISO 228 porting
- Various dirt alarm options available

Filter Housing Specifications

Flow Rating:	Up to 70 gpm (265 L/min) for 150 SUS (32 cSt) fluids
Max. Operating Pressure:	6000 psi (415 bar)
Min. Yield Pressure:	15,500 psi (1070 bar), per NFPA T2.6.1
Rated Fatigue Pressure:	3300 psi (230 bar), per NFPA T2.6.1-R1-2005
Temp. Range:	-20°F to 225°F (-29°C to 107°C)
Bypass Setting:	Cracking: 50 psi (3.5 bar) Full Flow: 65 psi (4.5 bar)
Porting Head: Element Case:	Ductile Iron Steel
Weight of VF60-9V:	24.0 lbs. (10.9 kg)
Element Change Clearance:	4.0" (103 mm)

Fluid Compatibility

Type Fluid	Appropriate Schroeder Media
Petroleum Based Fluids	All E-Media (cellulose) and Z-Media® (synthetic)
High Water Content	All Z-Media® (synthetic)
Invert Emulsions	10 and 25 µ Z-Media® (synthetic)
Water Glycols	3, 5, 10 and 25 µ Z-Media® (synthetic)
Phosphate Esters	All Z-Media® (synthetic) with H (EPR) seal designation
Skydrol®	3, 5, 10 and 25 µ Z-Media® (synthetic) with H.5 seal designation (EPR seals and stainless steel wire mesh in element, and light oil coating on housing exterior)

VF60 Top-Ported Pressure Filter

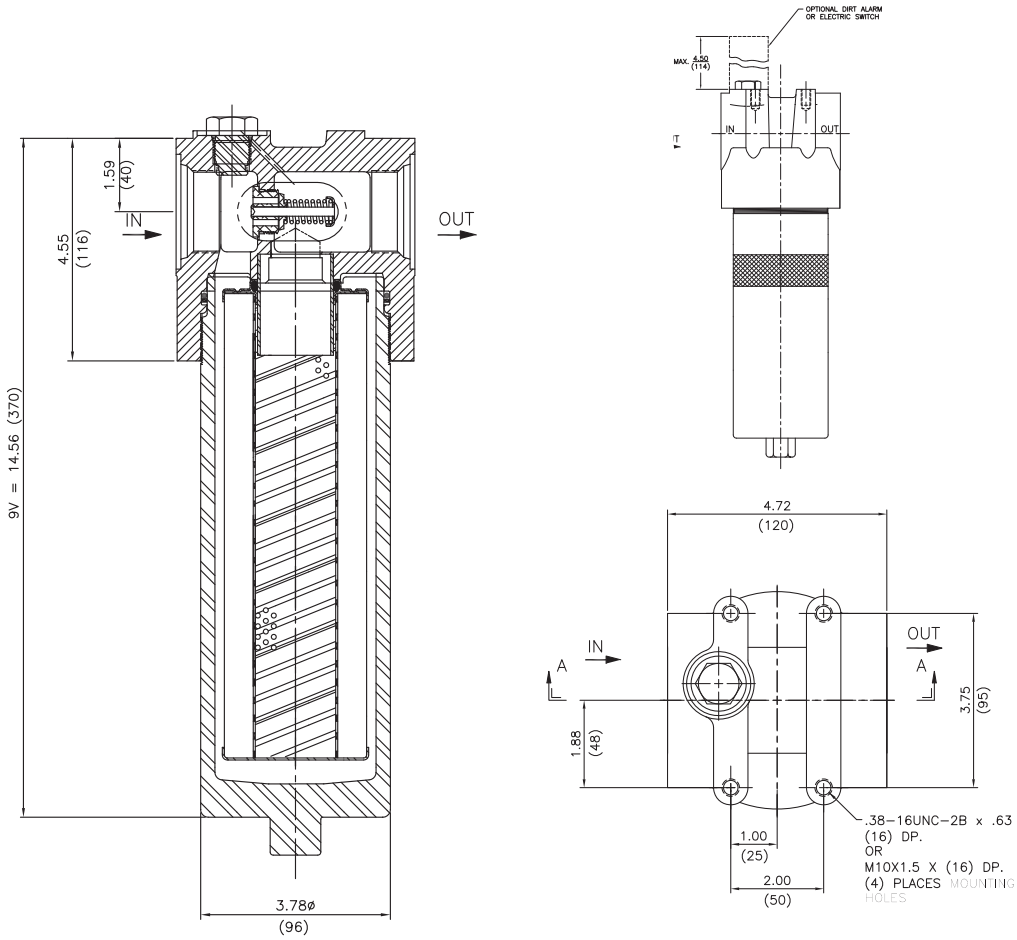

Metric dimensions in ( ).
Dimensions shown are inches (millimeters) for general information and overall envelope size only.
For complete dimensions please contact Schroeder Industries to request a certified print.

Element Performance Information & Dirt Holding Capacity

	Filtration Ratio Per ISO 4572/NFPA T3.10.8.8 Using automated particle counter (APC) calibrated per ISO 4402			Filtration Ratio per ISO 16889 Using APC calibrated per ISO 11171	
Element	$\beta_x \geq 75$	$\beta_x \geq 100$	$\beta_x \geq 200$	$\beta_x(c) \geq 200$	$\beta_x(c) \geq 1000$
9VZ1	<1.0	<1.0	<1.0	<4.0	4.2
9VZ3	<1.0	<1.0	<2.0	<4.0	4.8
9VZ5	2.5	3.0	4.0	4.8	6.3
9VZ10	7.4	8.2	10.0	8.0	10.0
9VZ25	18.0	20.0	22.5	19.0	24.0

Element	DHC (gm)
9VZ1	55
9VZ3	57
9VZ5	62
9VZ10	60
9VZ25	61

Element Collapse Rating: 150 psid (10 bar) for standard elements

Flow Direction: Outside In

Element Nominal Dimensions: 9V: 2.9" (75 mm) O.D. x 9.5" (240 mm) long

Pressure Drop Information
Based on Flow Rate and Viscosity

$\Delta P_{housing}$

VF60 $\Delta P_{housing}$ for fluids with sp gr (specific gravity) = 0.86:

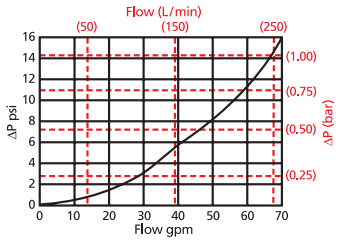

$\Delta P_{element}$

9VZ

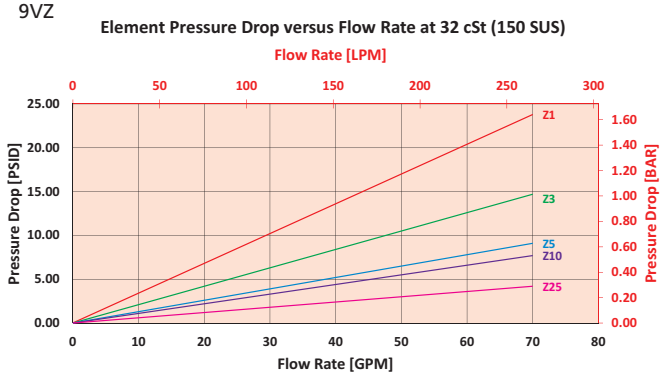

$$\Delta P_{filter} = \Delta P_{housing} + (\Delta P_{element} * V_f)$$

Exercise:

Determine ΔP_{filter} at 40 gpm (151 L/min) for VF609VZ1S using 120 SUS (25.5 cSt) fluid.

Use the housing pressure curve to determine $\Delta P_{housing}$ at 40 gpm. In this case, $\Delta P_{housing}$ is 6 psi (.42 bar) on the graph for the VF60 housing.

Use the element pressure curve to determine $\Delta P_{element}$ at 40 gpm. In this case, $\Delta P_{element}$ is 13 psi (.90 bar) according to the graph for the 9VZ1 element.

Because the viscosity in this sample is 120 SUS (25.5 cSt), we determine the **Viscosity Factor (V_f)** by dividing the **Operating Fluid Viscosity** with the **Standard Viscosity** of 150 SUS (32 cSt). To best determine your Operating Fluid Viscosity, please reference the chart in Appendix D.

Finally, the overall filter pressure differential, ΔP_{filter} , is calculated by adding $\Delta P_{housing}$ with the true element pressure differential, ($\Delta P_{element}$*V_f). The $\Delta P_{element}$ from the graph has to be multiplied by the viscosity factor to get the true pressure differential across the element.

Solution:

$\Delta P_{housing}$ = 6 psi [.42 bar] | $\Delta P_{element}$ = 13 psi [.90 bar]

V_f = 120 SUS (25.5 cSt) / 150 SUS (32 cSt) = .80

ΔP_{filter} = 6 psi + (13 psi * .80) = 16.4 psi

OR

ΔP_{filter} = .42 bar + (..90 bar * .80) = 1.14 bar

Note:
If your element is not graphed, use the following equation:
$\Delta P_{element}$ = Flow Rate x ΔP_f. Plug this variable into the overall pressure drop equation.

Ele.	ΔP
9V3	0.32
9V10	0.24

VF60 Top-Ported Pressure Filter

Filter Model Number Selection

How to Build a Valid Model Number for a Schroeder VF60:

BOX 1	BOX 2	BOX 3	BOX 4	BOX 5	BOX 6	BOX 7
VF60 –	–	–	–	–	–	–

BOX 1	BOX 2	BOX 3	BOX 4	BOX 5	BOX 6	BOX 7	
VF60 –	9 –	VZ1 –	–	S –	–	–	= VF609VZ1S

BOX 1

Filter Series
VF60

BOX 2

Element Length (in)
9

BOX 3

Element Size and Media	
V3	= V size 3 µ E media (cellulose)
V10	= V size 10 µ E media (cellulose)
VZ1	= V size 1 µ Excellement® Z-Media® (synthetic)
VZ3	= V size 3 µ Excellement® Z-Media® (synthetic)
VZ5	= V size 5 µ Excellement® Z-Media® (synthetic)
VZ10	= V size 10 µ Excellement® Z-Media® (synthetic)
VZ25	= V size 25 µ Excellement® Z-Media® (synthetic)
VM150	= V size 150 µ M media (reusable metal)

BOX 4

Seal Material	
Omit	= Buna N
V	= Viton®
H	= EPR

BOX 5

Inlet Port	
P	= 1¼" NPTF
S	= SAE-20
B	= ISO 228 G-1¼"

BOX 6

Bypass	
Omit	= 50 PSI bypass
40	= 40 PSI bypass

BOX 7

Dirt Alarm® Options		
	Omit =	None
Visual	D5 =	Visual pop-up
Visual with Thermal Lockout	D8 =	Visual w/ thermal lockout
Electrical	MS5 =	Electrical w/ 12 in. 18 gauge 4-conductor cable
	MS5LC =	Low current MS5
	MS10 =	Electrical w/ DIN connector (male end only)
	MS10LC =	Low current MS10
	MS11 =	Electrical w/ 12 ft. 4-conductor wire
	MS12 =	Electrical w/ 5 pin Brad Harrison connector (male end only)
	MS12LC =	Low current MS12
	MS16 =	Electrical w/ weather-packed sealed connector
	MS16LC =	Low current MS16
	MS17LC =	Electrical w/ 4 pin Brad Harrison male connector
Electrical with Thermal Lockout	MS5T =	MS5 (see above) w/ thermal lockout
	MS5LCT =	Low current MS5T
	MS10T =	MS10 (see above) w/ thermal lockout
	MS10LCT =	Low current MS10T
	MS12T =	MS12 (see above) w/ thermal lockout
	MS12LCT =	Low current MS12T
	MS16T =	MS16 (see above) w/ thermal lockout
	MS16LCT =	Low current MS16T
	MS17LCT =	Low current MS17T
Electrical Visual	MS13DC =	Supplied w/ threaded connector & light
	MS14DC =	Supplied w/ 5 pin Brad Harrison connector & light (male end)
Electrical Visual with Thermal Lockout	MS13DCT =	MS13 (see above), direct current, w/ thermal lockout
	MS13DCLCT =	Low current MS13DCT
	MS14DCT =	MS14 (see above), direct current, w/ thermal lockout
	MS14DCLCT =	Low current MS14DCT

NOTES:

Box 2. Replacement element part numbers are a combination of Boxes 2, 3, and 4.

Box 2. Example: 9VZ1V synthetic media elements are only available with Viton seals.

Box 4. Viton® is a registered trademark of DuPont Dow Elastomers.

Box 5. B porting option supplied with metric mounting holes.